OPEN BOX CHAIR

This project presents an upgraded design of the box chair used in non-human primate research, specifically for:

- Behavioral training
- Neurological assessments

Purpose of the Box Chair

- Stabilize the animal position during training.
- **Enable clear and unobstructed video capture**, ensuring visibility of limb and body movements for accurate analysis.
- Ensure researcher safety and easy access during training or testing.

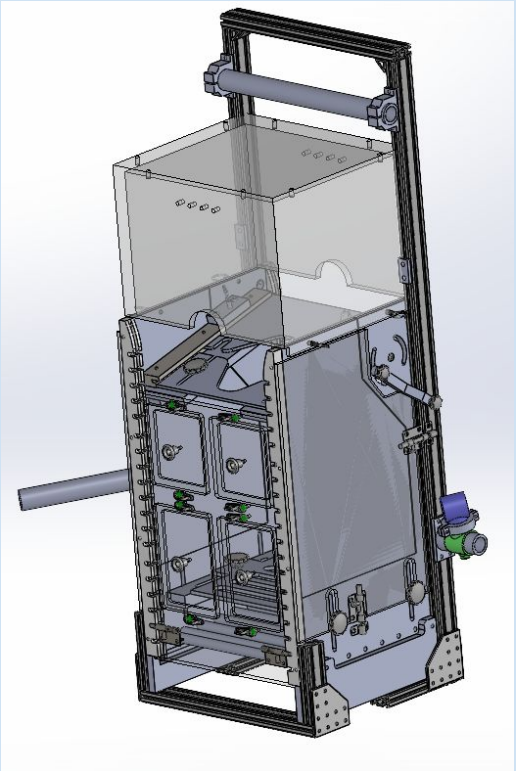

Open box chair

Why do we need a new box chair?

Limitations of the Previous Design:-

- **Obstructed camera views:** The old design blocked critical angles, making it difficult to capture clear footage.
- **Limited movement freedom:** The chair restricted certain movements of the animal, potentially affecting the training outcomes.
- **Interference with scoring procedures:** The design made it challenging to perform and observe standardized assessments such as the UPDRS scoring.
- **Limited Researcher Access:** Fixed panels made it difficult to interact with the animal for positioning and training.

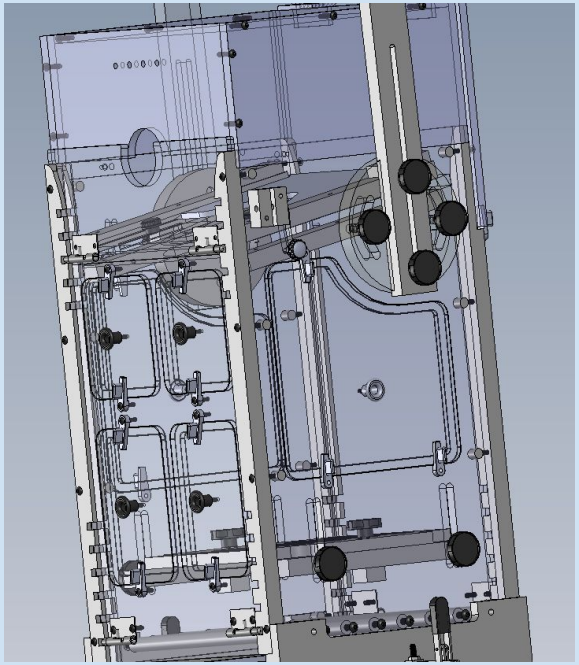

Old box chair

Overview of the New Open Box Chair Design

- **Unobstructed movement capture:** The new design eliminates visual blockages, allowing clear video recording from multiple angles.
- **Design flexibility:** Side and front panels are fully removable while training, enabling better access without compromising structural integrity or safety constraints.
- **Improved hand mobility:** The updated chair provides more freedom for the monkey's arm movement during tasks or assessments.
- **Reinforced outer frame:** A sturdy outer structure enhances overall stability and safety during use.
- **Targeted arm positioning constraints:** The new chair design incorporates positioned arm supports that helps to constraint and stabilize the monkey's arm during tasks.

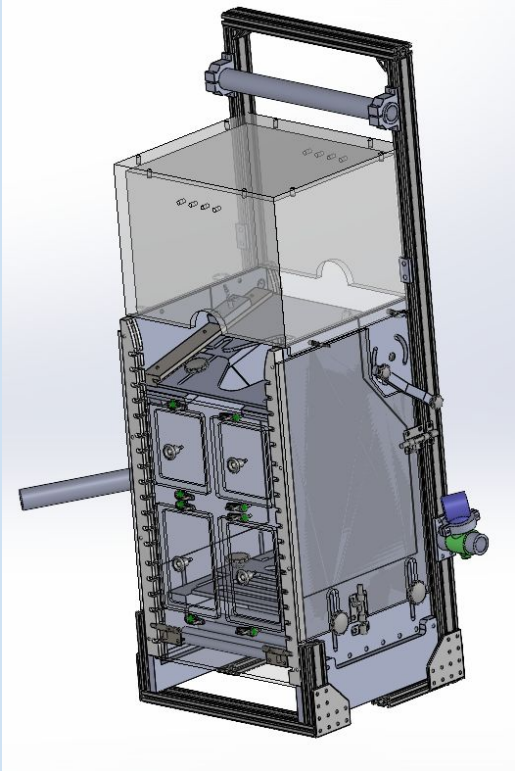

Comparison between old and new side panel

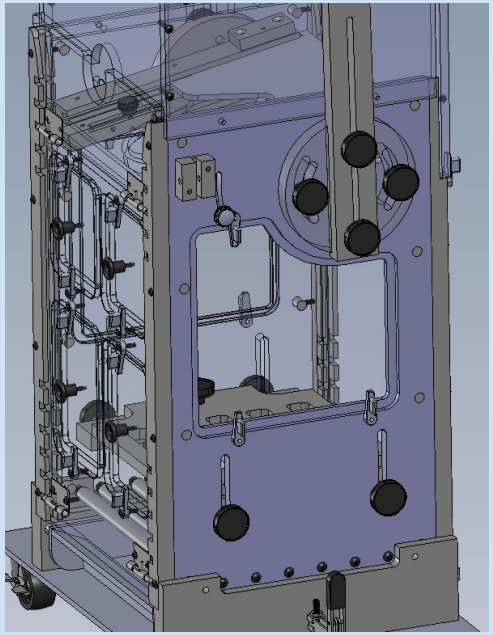

Old side panel

In the old chair, only a small window on the side panel could be opened. The rest of the panel was fixed in place. This made it difficult to reach into the chair, adjust the monkey's position, or get a clear view for video recording.

In contrast, the new design features a nearly fully removable side panel. During training or handling:

- The entire side can be opened or detached.
- Give researchers better physical access to the monkey.
- And allows for unobstructed side-angle camera views.

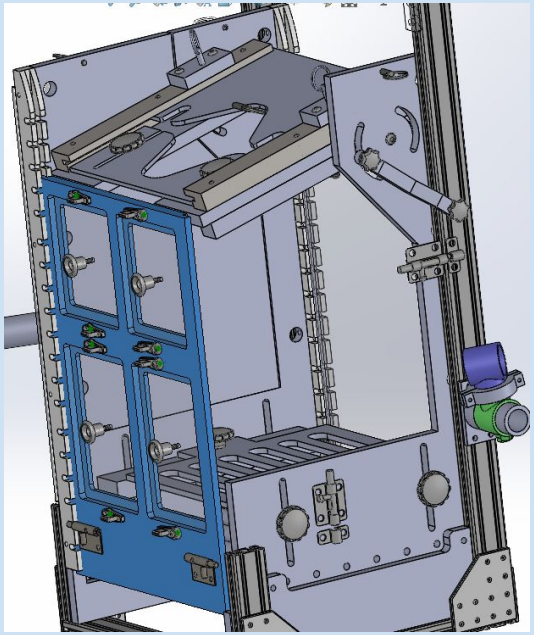

New side panel

Overall Impact: This single modification directly improves the quality of video data capture and enhances the efficiency of animal handling and training.

Training Configuration

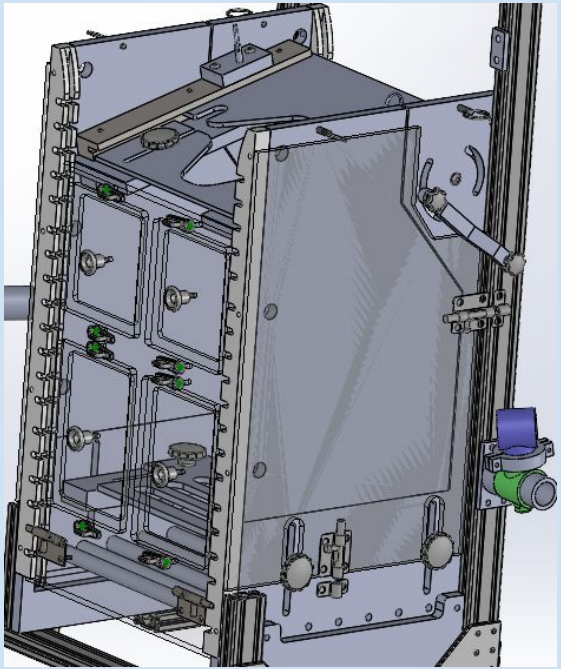

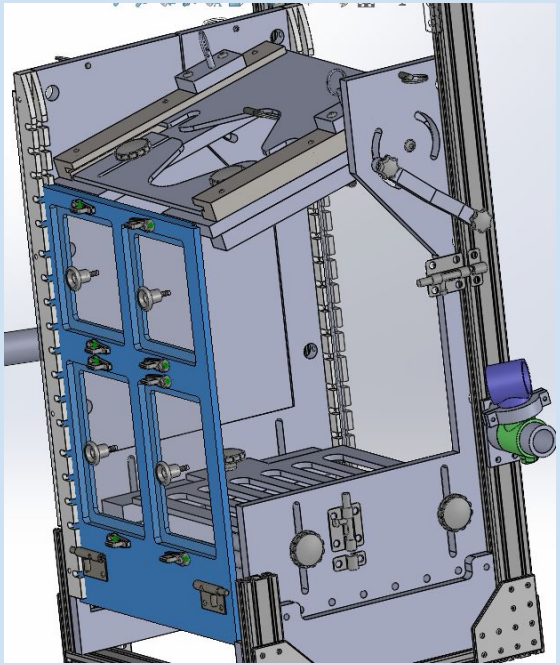

Side panel open

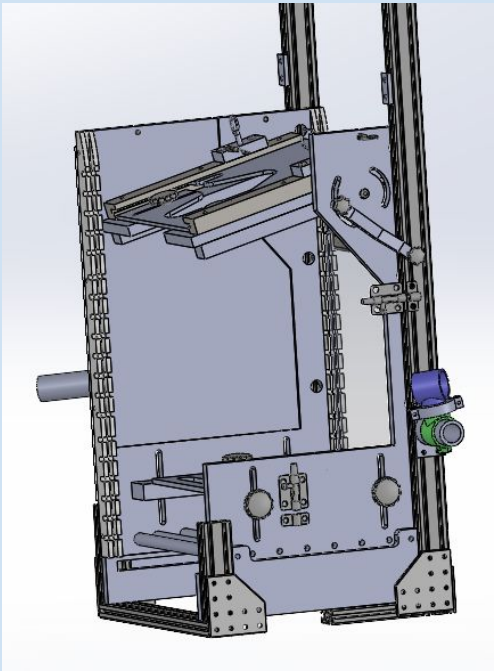

Front and side panel open

Chair while training

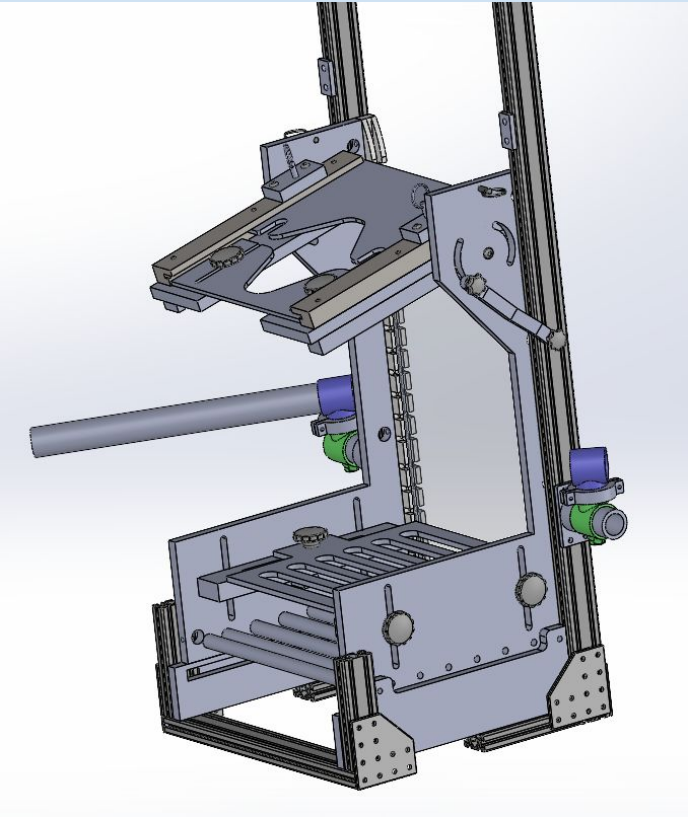

This fully open configuration leverages the chair's key design features to create an ideal environment for advanced tasks and assessments.

- This setup provides researchers with better physical access to the monkey.
- It is designed to improve hand mobility and provide more freedom for the monkey's arm movement during tasks or assessments.
- The open frame enables clear and unobstructed video capture , ensuring visibility of limb and body movements for accurate analysis.
- Even with panels removed, the reinforced outer frame enhances overall stability and safety during use.

Complete Documentation for Replication

CAD Files

- Includes all major file formats:
  - **STEP files** for better compatibility.
  - **SolidWorks parts and assembly files**

Technical Drawings

- Every part is documented with:
  - **SolidWorks drawing files (.SLDDRW)**
  - **PDF versions** for easy viewing and printing
  - All drawings are compiled in a **printed file folder**

Excel Reference Sheet

- A detailed Excel sheet tracks:
  - **Part names, quantities, and descriptions**
  - **Material information**
  - **Purchase status** (we have to buy or not)
  - **Links to online sources**
  - **Associated CAD and drawing file references**
  - **Fasteners and bolt requirements and their Purchase link.**

This documentation **enables easy replication and modification** of the open box chair by other researchers or labs.

Q&A

Thank you

ANY Questions or feedback/suggestions ?